Thomas Henry Quadrature Function Generator (Eurorack DIY)

Introduction

I consider the Quadrature Function Generator (or QFG) to be one of the classic Thomas Henry deisgns. There has been a PCB years ago, but we thought it would be time to re-publish it again.
You can find a detailed description of this design at Scott Stites birthofasynth.com page, where he hosts a lot of information for Thomas Henry designs.

Features

Triangle core VCO with four outputs at 0, 90, 180 and 270° degrees,
Indicator LEDs,
CV input with attenuator,
CV input for 1V/Octave
Coarse and Fine tuning pots,
Range switch (sub audio/audio range)

Specifications

The frontpanel measures: 8HP (Eurorack)
Mounting depth behind frontpanel incl. power plug: 40mm
Power consumption: +30mA/-30mA

BTW this is not meant as a beginners project. I do not provide step-by-step building instructions. I just assume that you already build quite a few projects and know how to read the BOM and schematics.

©2017 by Matthias Herrmann | Do not copy or distribute by any means | For private use only | www.FONITRONIK.de

Layout/Design

General mounting instructions

This project uses two PCBs, one board with the actual circuitry and an additional adapter PCB carrying the front panel components. The adapter PCB is used to mount the PCBs to the front panel.
The PCBs are connected using two 1x20 headers/receptables with 2,54mm pitch (.1in). Look out for something like this:

Note…

… the PCB is cramped with parts, so there are only two mounting holes on the main PCB. They cannot be used to screw the main PCB to the adapter PCB.
I recoomend to use precision SIL headers and receptables, which mate rather firmly.

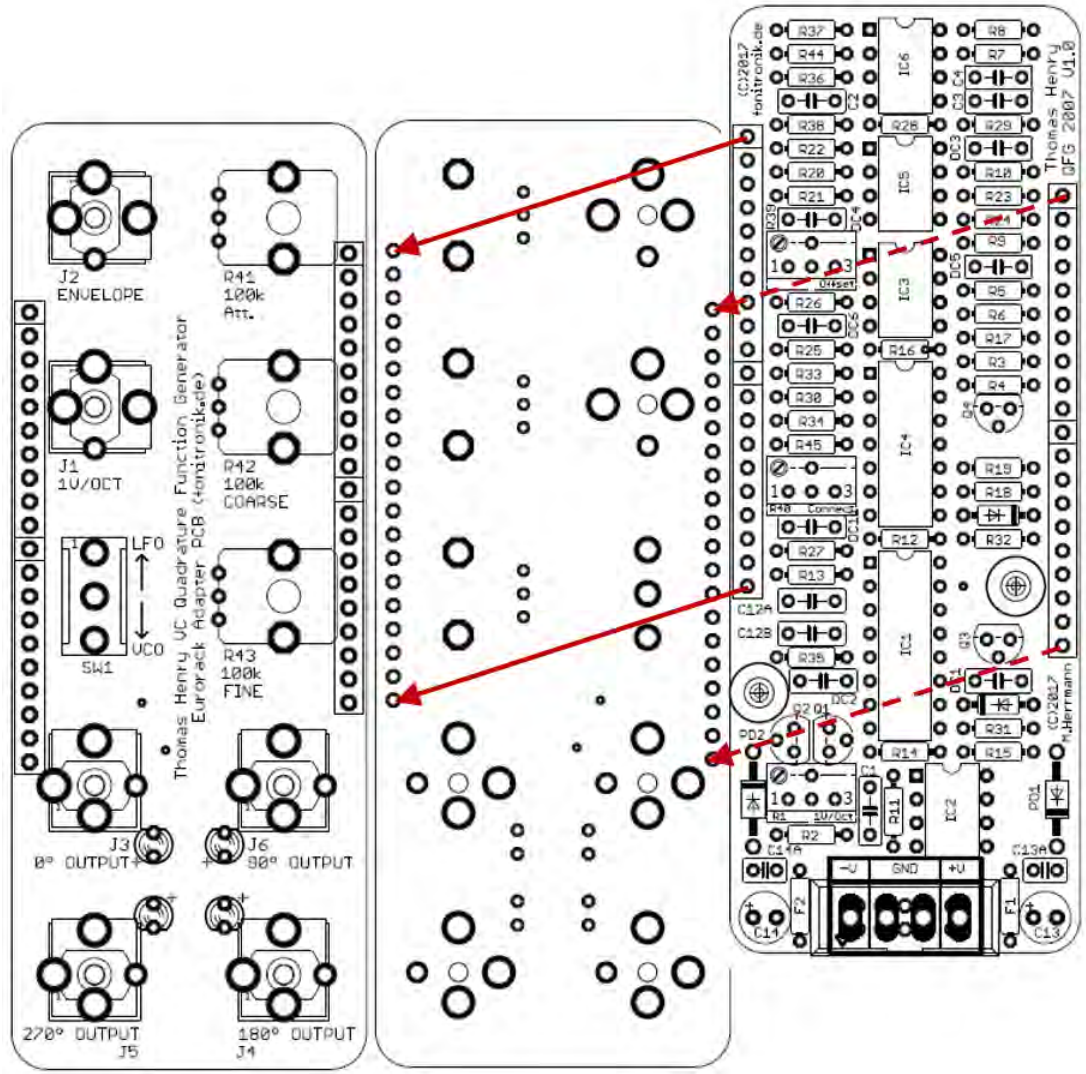

Overlay for Reference & Manual Wiring Guide

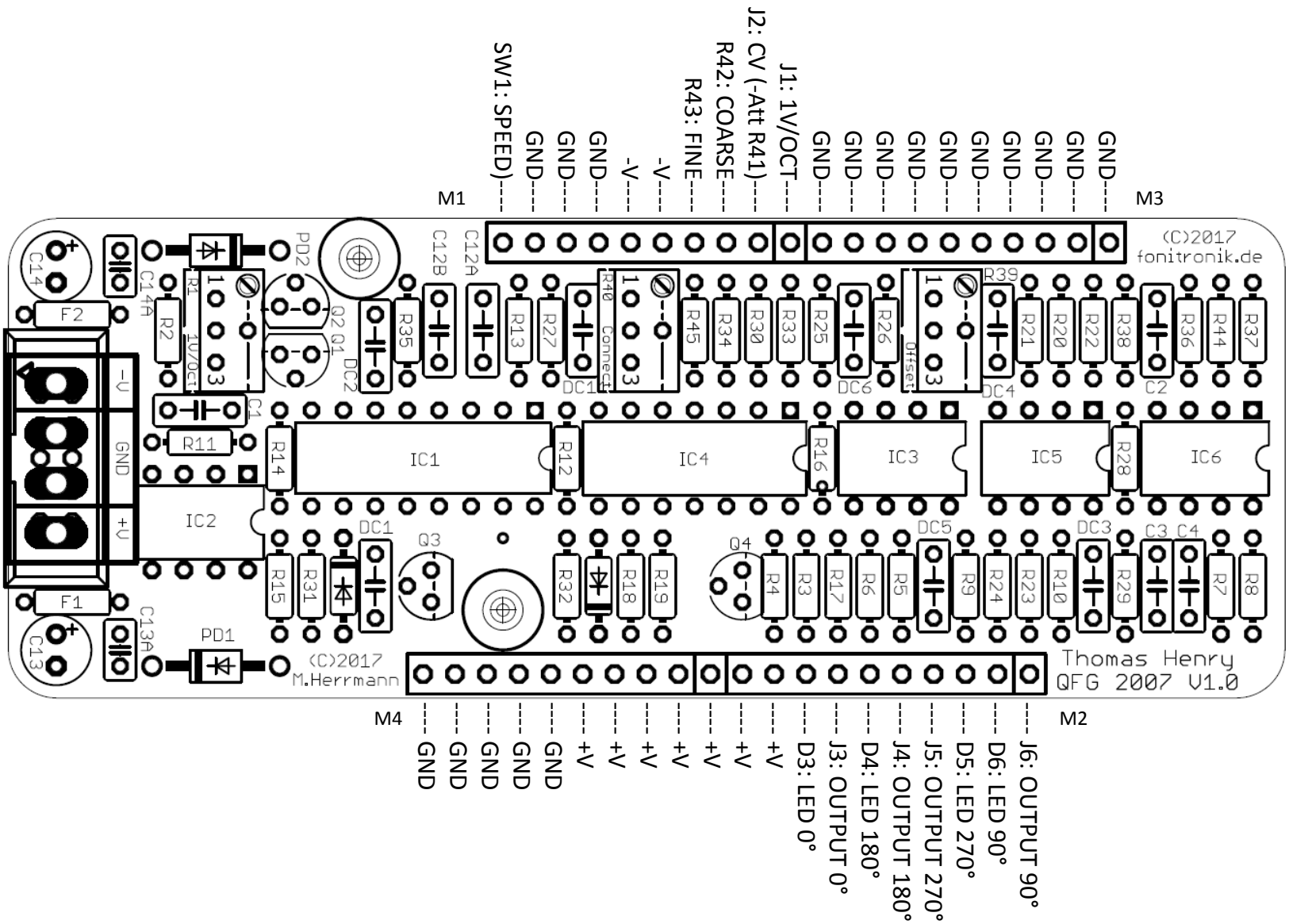

BOM

Qty	Value	Parts
	Resistors	
2	10R or ferrite	F1, F2
1	100R (trimmer)	R1
1	390R	R2
8	1k	R3, R4, R5, R6, R7, R8, R9, R10
1	2k	R11
1	4k7	R12
1	5k6	R13
11	10k	R14, R15, R16, R17, R18, R19, R20, R21, R22, R23, R24
1	12k	R25
1	15k	R26
1	18k	R27
2	22k	R28, R29
2	47k	R30, R31
1	56k	R32
6	100k	R33, R34, R35, R36, R37, R38
2	100k (trimmer)	R39, R40
1	150k	R44
1	3M3	R45
	Capacitors	
2	100pF	C1, C2
1	1n	C3
1	2n2	C4
1	4n7	C12A (timing cap)
7	10n	DC1, DC2, DC3, DC4, DC5, DC6, DC11
2	100n	C13A, C14A
1	470n	C12B (timing cap)
2	10uF	C13, C14

Qty	Value	Parts
	Semi's	
2	1N4148	D1, D2
2	1N4004	PD1, PD2
1	2N3904	Q1
2	2N3906	Q2, Q3
1	J112	Q4
1	LM13700	IC1
4	TL072	IC2, IC3, IC5, IC6
1	CD4001	IC4
	Misc (Adapter PCB)	
1	SPDT on-on (miniature)	SW1
3	100k (9mm Potentiometer)	R41, R42, R43
1	Socket (PJ-301B)	J1 - J6
4	LED (3mm)	D3, D4, D5, D6
2x	20pol SIL header (female)	
2x	20pol SIL header (male)	

©2017 by Matthias Herrmann | Do not copy or distribute by any means | For private use only | www.FONITRONIK.de

Private use only. Do not copy and/or distribute by any means.

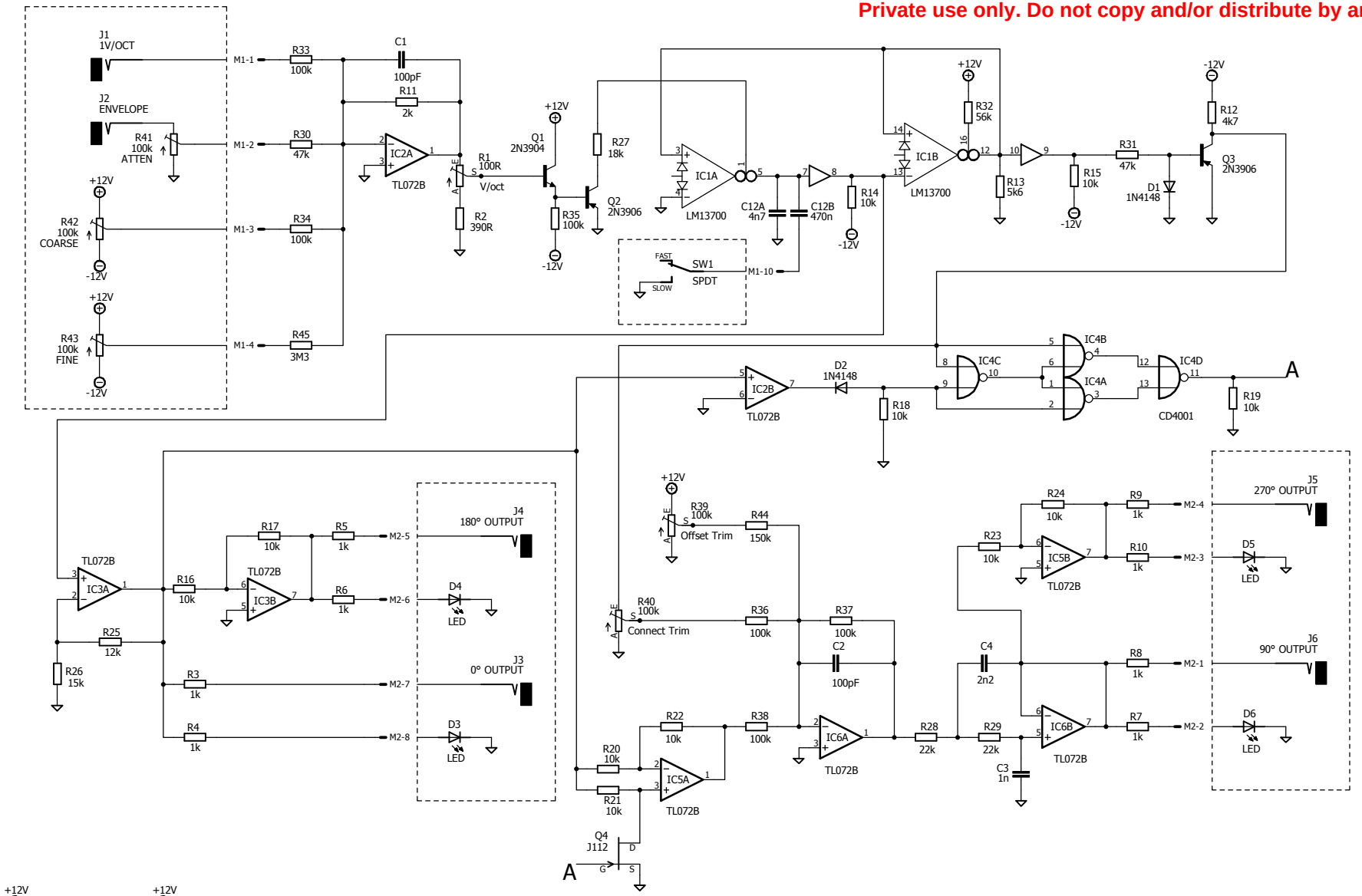

THOMAS HENRY QFG

Quadrature Function Generator 2007
Redrawn schematic by Matthias Herrmann 2017

TITLE: QFG2007-8HP	
Document Number:	REV: 1.0
Date: 25.09.2017 21:39	Sheet: 1/1